THIS DRAWING IS UNPUBLISHED. RELEASED FOR PUBLICATION , 2000
© COPYRIGHT 2000 BY AMP INCORPORATED. ALL RIGHTS RESERVED.

LOC	DIST
C	—

REVISIONS 変更

P	LTR	DESCRIPTION	ECN NO.	DATE	DWN	APVD
	0	RELEASED	FJ00-0904-00	23MAY00	T.K	

①	CATHODE
②	ANODE
⚠2	POLARIZATION

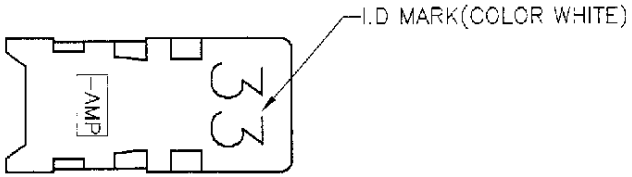

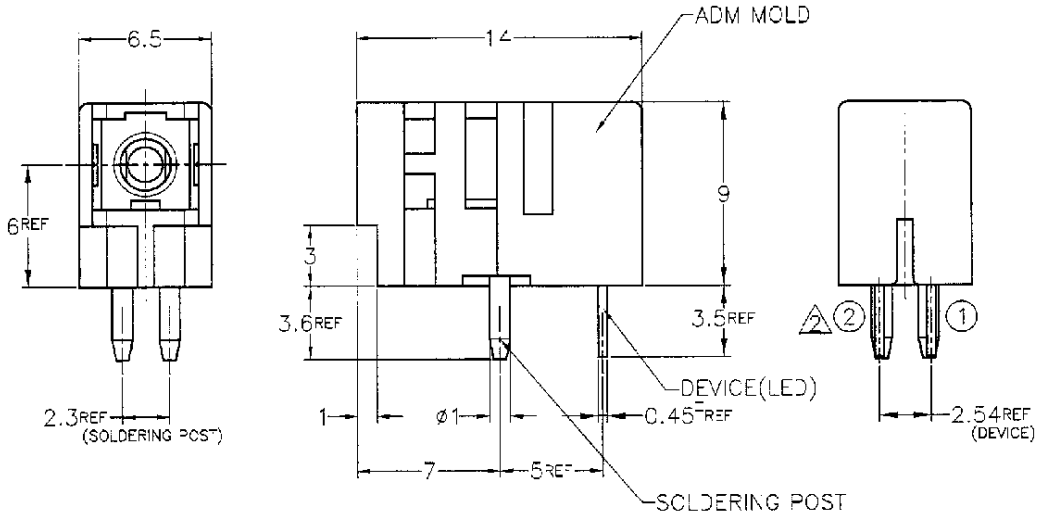

DEVICE PERFORMANCE SPEC. :

MAXIMUM RATINGS (Ta=25°C)

CHARACTERISTICS	SYMBOL	RATING	UNIT
Forward Current (DC)	IF	40	mA
Reverse Voltage	VR	5	V
Operating Temp.	Topr	−10~+70	°C
Storage Temp.	Tstg	−40~+85	°C
Lead Soldering Cycle	Tsol	230°C,5sec	

OPTICAL−ELECTRICAL CHARACTERISTICS (Ta=25°C)

CHARACTERISTICS	SYMBOL	RATING	MIN.	TYP.	MAX.	UNIT
Fiber Coupled Power	Pf	IF=20mA ⚠3	−10.5	−−	−−	dBm
Reverse Current	IR	VR=5V	−−	−−	10	μA
Forward Voltage	VF	IF=20mA	−−	1.9	2.3	V
Peak Emition Wavelength	λp	IF=20mA	−−	650	−−	nm
Spectral Width(FWHM)	Δλ	IF=20mA	−−	20	−−	nm

1. MATERIAL
   ADM MOLD: THERMOPLASTIC(熱可塑性ポリエステル) UL 94V−0
   SOLDERING POST: Pre Tin−Lead Fe(半田メッキ付鉄)

⚠2 POLARIZATION: SEE ABOVE TABLE

⚠3 USING PLASTIC FIBER CABLE
   NA=0.5 , CORE/CLAD=980/1000μm , LENGTH=1m

4. FLUX CREANING
   USE ALCOHOL FOR CREANING.
   CREANING TIME: 30sec. MAX.
   SOLVENTS TEMPERATURE: 45°C MAX.

33	LED	3−174134−3
I.D MARK	DEVICE	PART NUMBER

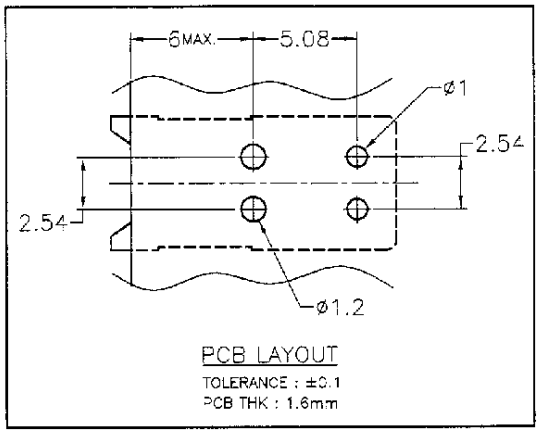

PCB LAYOUT
TOLERANCE : ±0.1
PCB THK : 1.6mm

THIS DRAWING IS A CONTROLLED DOCUMENT.

DIMENSIONS: 単位 MM

TOLERANCES UNLESS OTHERWISE SPECIFIED: 一般公差

0 PLC	± 0.3
1 PLC	± 0.3
2 PLC	±
3 PLC	±
4 PLC	±
ANGLES	±3°

MATERIAL 材料 | FINISH 仕上

DWN T.KIKUTA 23−MAY '00
CHK 23 May '00
APVD
PRODUCT SPEC 製品規格
APPLICATION SPEC 取付適用規格
WEIGHT −

AMP Tyco Electronics AMP K.K. Kawasaki, Japan

NAME 名称: S.MPLEX LED MODULE (AMP OPTIMATE Mini−DNP CONN.)

SIZE	CAGE CODE	DRAWING NO 番号	RESTRICTED TO
A3	00779	C−3−174134−3	−

CUSTOMER DRAWING | SCALE 尺度 4:1 | SHEET 1 OF 1 | REV 0

参考図面

AMP 1470−19 REV 23FEB95
23MAY00 − fj023100 L:/EN22_vco/AutoCAD/