THIS DRAWING IS UNPUBLISHED. RELEASED FOR PUBLICATION ,19 .
© COPYRIGHT 19 BY AMP INCORPORATED. ALL RIGHTS RESERVED.

LOC	DIST
J	00

REVISIONS

P	LTR	DESCRIPTION	DATE	DWN	APVD
	K	REVISED PER EC 0513-0489-03	05JAN04	JG	JG

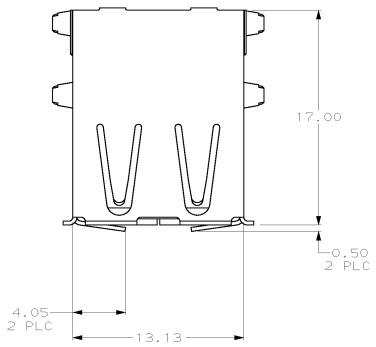

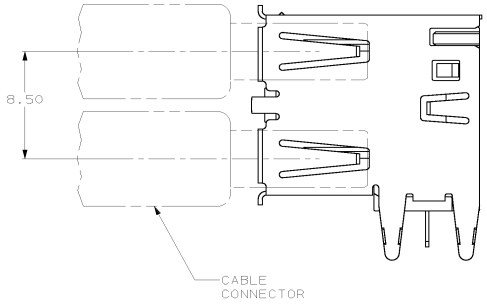

1. MATERIAL:
   SHELL & CONTACTS- COPPER ALLOY.
   HOUSING- UL 94V-0 RATED, THERMOPLASTIC, SEE TABLE.
2. PLATING:
   CONTACTS- 0.076µm MINIMUM GOLD OVER 0.76µm MINIMUM PALLADIUM-NICKEL ON MATING AREA. OR CONTACT ALTRENATE PLATING 0.76µm MINIMUM GOLD ON MATING AREA.
   3.80µm MINIMUM TIN-LEAD ON SOLDER TAILS.
   BOTH OVER 1.27µm MINIMUM NICKEL.
   SHELL: 5.10µm MINIMUM BRIGHT TIN OVER 2.50µm MINIMUM COPPER.
3. DATUM AND BASIC DIMENSIONS ESTABLISHED BY CUSTOMER.
4. RECOMMENDED PC BOARD THICKNESS OF 1.57.

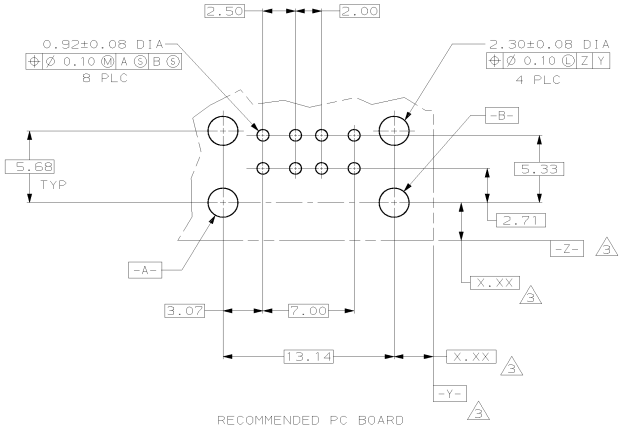

RECOMMENDED PC BOARD MOUNTING DIMENSIONS

4

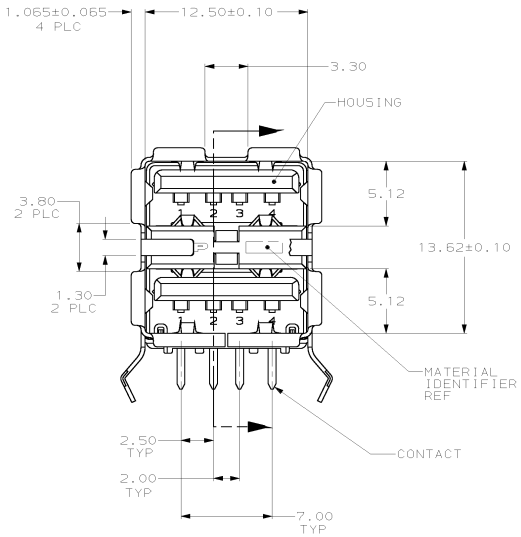

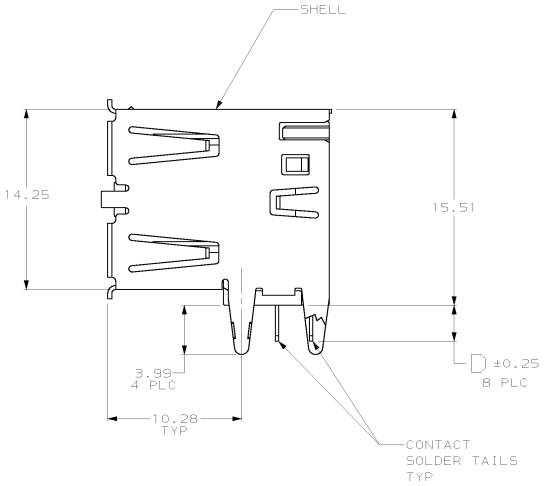

OBSOLETE	HIGH TEMPERATURE COMPATIBLE	D	HOUSING COLOR	PART NUMBER
	YES	2.84±0.25	NATURAL	787745-6
	YES	2.29±0.25	BLACK	787745-5
	YES	2.84±0.25	BLACK	787745-4
	NO	2.84±0.25	NATURAL	787745-3
	NO	2.29±0.25	BLACK	787745-2
	NO	2.84±0.25	BLACK	787745-1

THIS DRAWING IS A CONTROLLED DOCUMENT FOR AMP INCORPORATED. IT IS SUBJECT TO CHANGE AND THE CONTROLLING DIVISION/ORGANIZATION SHOULD BE CONTACTED FOR THE LATEST REVISION.

DIMENSIONS: MM

TOLERANCES UNLESS OTHERWISE SPECIFIED:
0 PLC ±-
1 PLC ±-
2 PLC ±0.13
3 PLC ±-
4 PLC ±-
ANGLES -

MATERIAL 1 FINISH 2

DWN D.BROCKWAY 10 MAY 96
CHK R.STONE 13 MAY 96
APVD R.WALTER 14 MAY 96

PRODUCT SPEC 108-1586
APPLICATION SPEC 114-40054
WEIGHT -

CUSTOMER DRAWING

AMP

AMP Incorporated
Harrisburg, PA 17105-3608

NAME
RECEPTACLE ASSEMBLY, RIGHT ANGLE, STACKED, THRU-HOLE, USB

SIZE A1 CAGE CODE 00779 DRAWING NO C-787745

SCALE 5:1 SHEET 1 OF 1 REV K