THIS DRAWING IS UNPUBLISHED. RELEASED FOR PUBLICATION 390262 ,390262
© COPYRIGHT 390262 BY TYCO ELECTRONICS CORPORATION. ALL RIGHTS RESERVED.

LOC	DIST
AD	00

REVISIONS

P	LTR	DESCRIPTION	DATE	DWN	APVD
	J	ECO 06 000946	25JUL06	BSV	MK

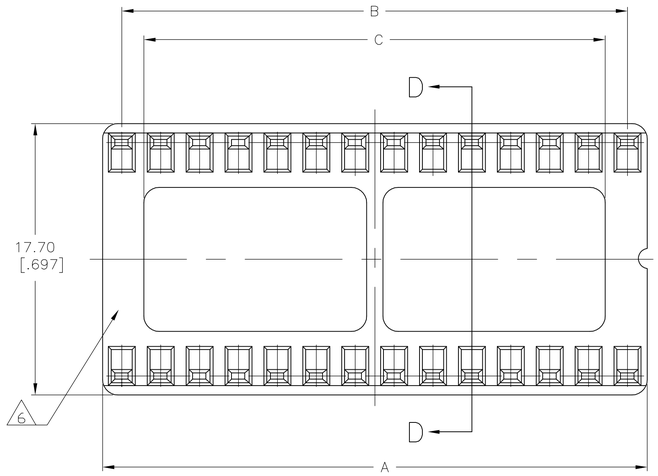

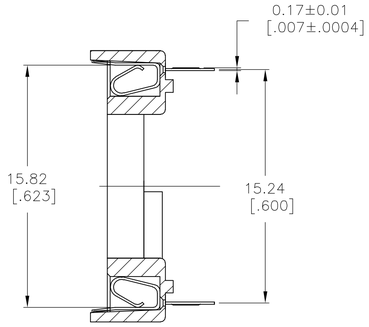

SECTION D—D

NOTE:

1. MATERIAL:
   HOUSING: 30% GLASS FILLED PBT, THERMOPLASTIC, BLACK.
   CONTACT: PHOS BRONZE
2. FINISH: CONTACT PLATING: TIN—LEAD (60μ INCHES MIN.)
   SOLDERABILITY :95% COVERAGE MIN.;
   TEST TEMPERATURE=230°C±5°C
   TEST TIME = 5±5 SECONDS.
3. MECHANICAL SPECS:
   DURABILITY: 50 CYCLES MIN.
   INSERTION FORCE:300 GRAMS MAX.
   WITHDRAWAL FORCE: 20 GRAMS MIN.
   CONTACT RETENTION: 500 GRAMS MIN.
   ACCEPTS: 0.20—0.30 [.008—.012] LEADS
4. ELECTRICAL SPECS:
   VOLTAGE RATING: 250V AC,DC
   CONTACT RESISTANCE: 20 MILLOHMS MAX.
   CURRENT RATING: 1 AMPERE AC,DC
   INSULATION RESISTANCE: 1000 MEGOHMS MIN.
   DIELECTRIC WITHSTANDING VOLTAGE: AC 1000 V MIN.
5. OPERATING TEMPERATURE: —40°C TO +105°C
6. AMP LOGO
7. FINISH: CONTACT PLATING TIN (LEAD FREE); 60 UIN MIN. OVER 30 UIN Ni
   SOLDERABILITY :95% COVERAGE MIN.;
   TEST TEMPERATURE=260°±5°C;
   TEST TIME = 5±5 SECONDS.

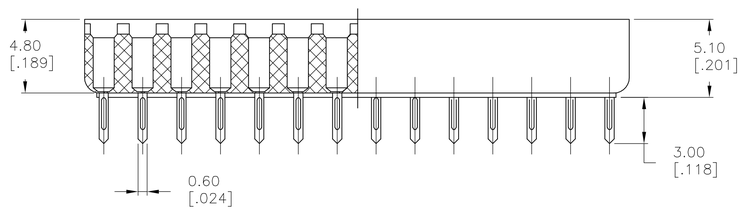

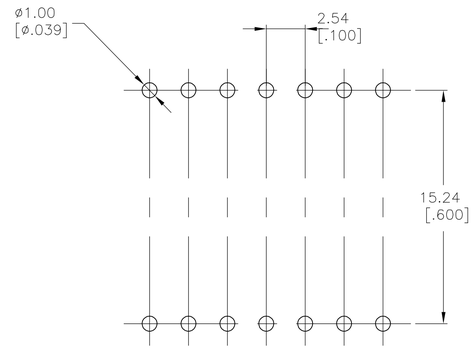

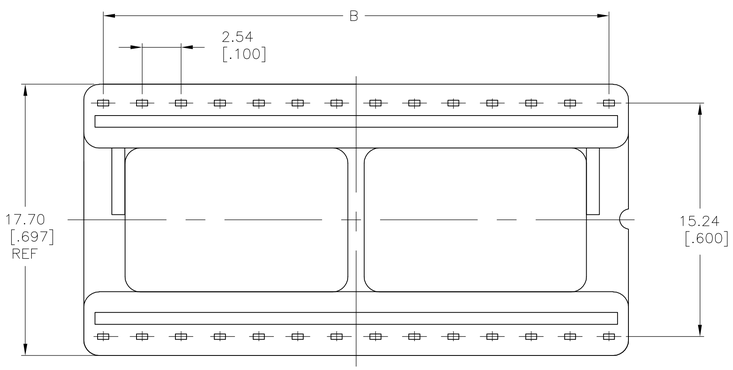

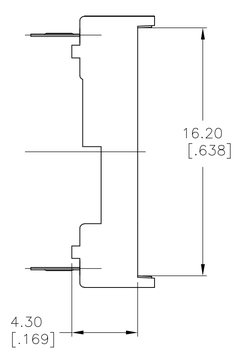

7	48	60.96 [2.400]	58.42 [2.300]	55.52 [2.19]	1—390262—7
7	42	53.34 [2.100]	50.8 [2.000]	47.90 [1.89]	1—390262—6
7	40	50.80 [2.000]	48.26 [1.900]	45.36 [1.79]	1—390262—5
7	32	40.64 [1.600]	38.10 [1.500]	35.20 [1.39]	1—390262—3
7	28	35.56 [1.400]	33.02 [1.300]	30.12 [1.19]	1—390262—2
7	24	30.48 [1.200]	27.94 [1.100]	25.10 [.988]	1—390262—1
2	48	60.96 [2.400]	58.42 [2.300]	55.52 [2.19]	390262—7
2	42	53.34 [2.100]	50.8 [2.000]	47.90 [1.89]	390262—6
2	40	50.80 [2.000]	48.26 [1.900]	45.36 [1.79]	390262—5
2	32	40.64 [1.600]	38.10 [1.500]	35.20 [1.39]	390262—3
2	28	35.56 [1.400]	33.02 [1.300]	30.12 [1.19]	390262—2
2	24	30.48 [1.200]	27.94 [1.100]	25.10 [.988]	390262—1
FINISH	POS	A±0.20 [.008]	B±0.10 [.004]	C±0.15 [.004]	PART NO.

THIS DRAWING IS A CONTROLLED DOCUMENT.

DIMENSIONS: mm [INCHES]

TOLERANCES UNLESS OTHERWISE SPECIFIED:
0 PLC ±
1 PLC ±
2 PLC ± 0.2[.008]
3 PLC ±
4 PLC ±
ANGLES ±

MATERIAL 1

FINISH 2 - 7

DWN BSV 07SEP04
CHK —
APVD
PRODUCT SPEC —
APPLICATION SPEC —
WEIGHT

tyco Electronics
Tyco Electronics Corporation
Harrisburg, Pa 17105—3608

NAME DIP SOCKET, .600 CENTER LINE LADDER STYLE

SIZE A1 | CAGE CODE — | DRAWING NO C—390262 | RESTRICTED TO —

CUSTOMER DRAWING | SCALE 5:1 | SHEET 1 OF 1 | REV J