ZEICHNUNG GESCHÜTZT DURCH
© COPYRIGHT 1989
AMP DEUTSCHLAND GMBH
ALLE RECHTE VORBEHALTEN

REV.	ÄNDERUNG	DATUM	NAME
1	MASS 2,54 ±0,1 WAR 2,54		
	MASS 2,540.2 WAR 2,6 HINZU ALLG. TOLERANZ ab.1	08.11.88	AUGUSTINIAK

DO NOT SCALE
DIMENSIONS IN mm

METRIC

THIRD ANGLE PROJECTION

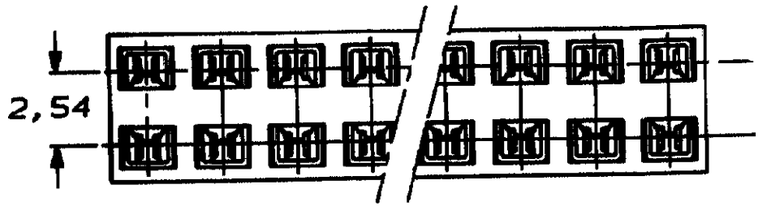

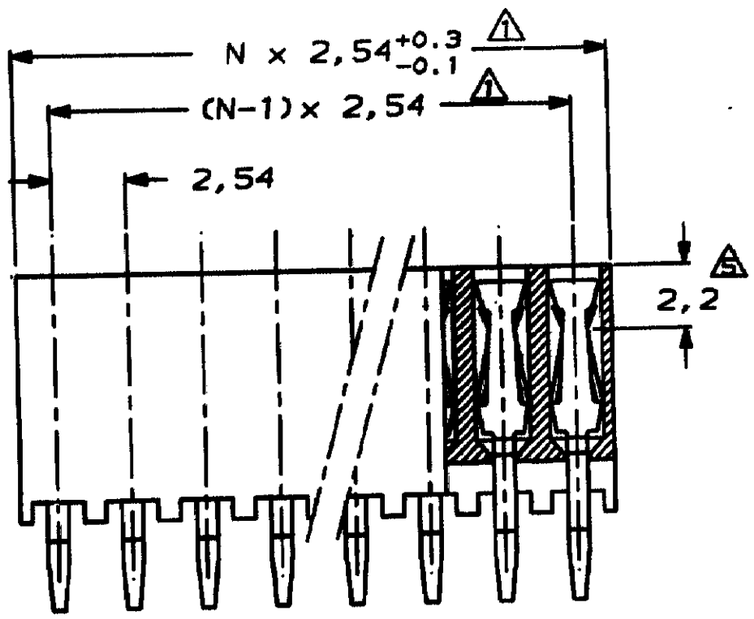

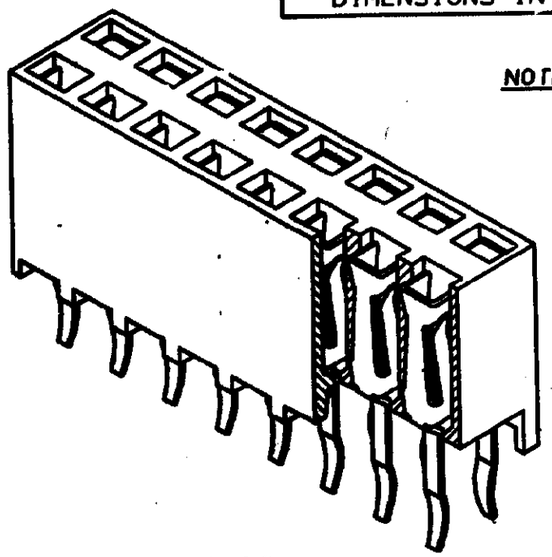

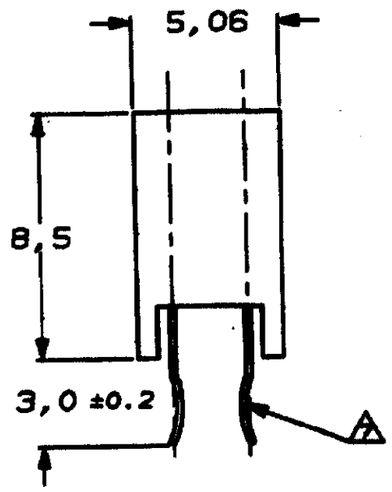

NOTES:

1. TO DETERMINE DIMENSIONS TAKE 2xN = NR. OF POS.
   FOR EXAMPLE: 2x10 POS., N x 2,54 = 25,4 mm.
   FOR ORDERNR. USE BASIC NR. + NR. OF POS.
   FOR EXAMPLE: 2x2 POS.= 215309-2 (SHORTEST VERSION)
   2x36 POS.= 3-215309-6 (LONGEST VERSION)
2. HOUSING MATERIAL: GREEN GLASSFILLED POLYESTER, UL 94V-0
   CONTACT MATERIAL: PHOSPHORBRONZE.
3. PLATING: UNDERCOATING: 1,3µm Ni.
   AT CONT.PLACE: 0,8µm Au.
   AT SOLDER-TYNES: 2,5µm Sn.Pb.
4. MATES WITH 0,63 SQUARE/ROUND MODU POSTS.
5. CONTACT-POINT.
6. RECOMMENDED P.C.BOARD-THICKNESS: 1,6.
7. HIGH TEMPERATURE SEALANT.
8. RETENTION FEATURE.

FOR REFERENCE ONLY
WILL NOT BE UP - DATED

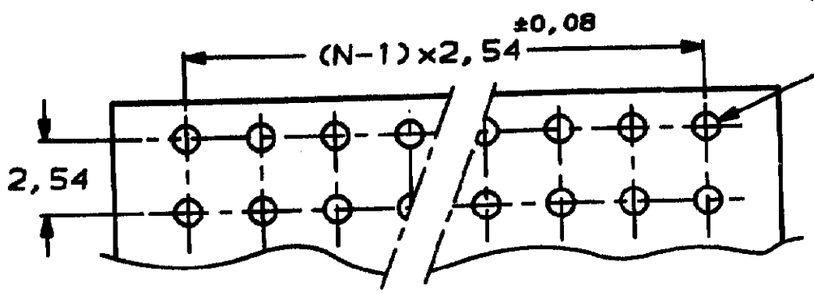

P.C.-BOARD HOLE-PATTERN

	SEE NOTES	SEE NOTES	SEE NOTES
	FINISH	MATERIAL	PARTNUMBER

CUSTOMER DRAWING

FOR REFERENCE ONLY
WILL NOT BE UPDATED

AMP — AMP-HOLLAND B.V. 's-Hertogenbosch, The Netherlands.

~~THIS DRAWING IS UNPUBLISHED~~ RELEASED FOR PUBLICATION 14.8.1986

© COPYRIGHT 1986 BY AMP-HOLLAND B.V.
ALL INTERNATIONAL RIGHTS RESERVED.
AMP PRODUCTS MAY BE COVERED BY U.S. AND FOREIGN PATENTS AND/OR PATENTS PENDING.

DR. L.V.D.HEYDEN	DATE 08.07.86	WIRE RANGE -	NAME HV-100 VERTICAL CONNECTOR
CHK. W.SIMONS	DATE	INSUL.RANGE -	DUAL ROW, 8,5mm HEIGHT, TOP ENTRY, GOLD, MAX. 2x36 POSITIONS.
APP. L.v.SOEST	DATE	SIZE A3 / SHEET 1 OF 1	DWG. No. C-215309

REV.DATE D M Y: 02 11 88 — REV.LTR: 1

NICHT TOLERIERTE MASSE ± 0.1 ± -
MASSSTAB 5:1

Lead Free Conversion in Process - Refer to Specification 230-700 at www.tycoelectronics.com/leadfree