THIS DRAWING IS UNPUBLISHED. RELEASED FOR PUBLICATION -,- .
© COPYRIGHT - BY TYCO ELECTRONICS CORPORATION. ALL RIGHTS RESERVED.

LOC	DIST
GP	00

REVISIONS

P	LTR	DESCRIPTION	DATE	DWN	APVD
	H	REVISED PER EC 0S13-0370-03	10MAR04	BM	JG

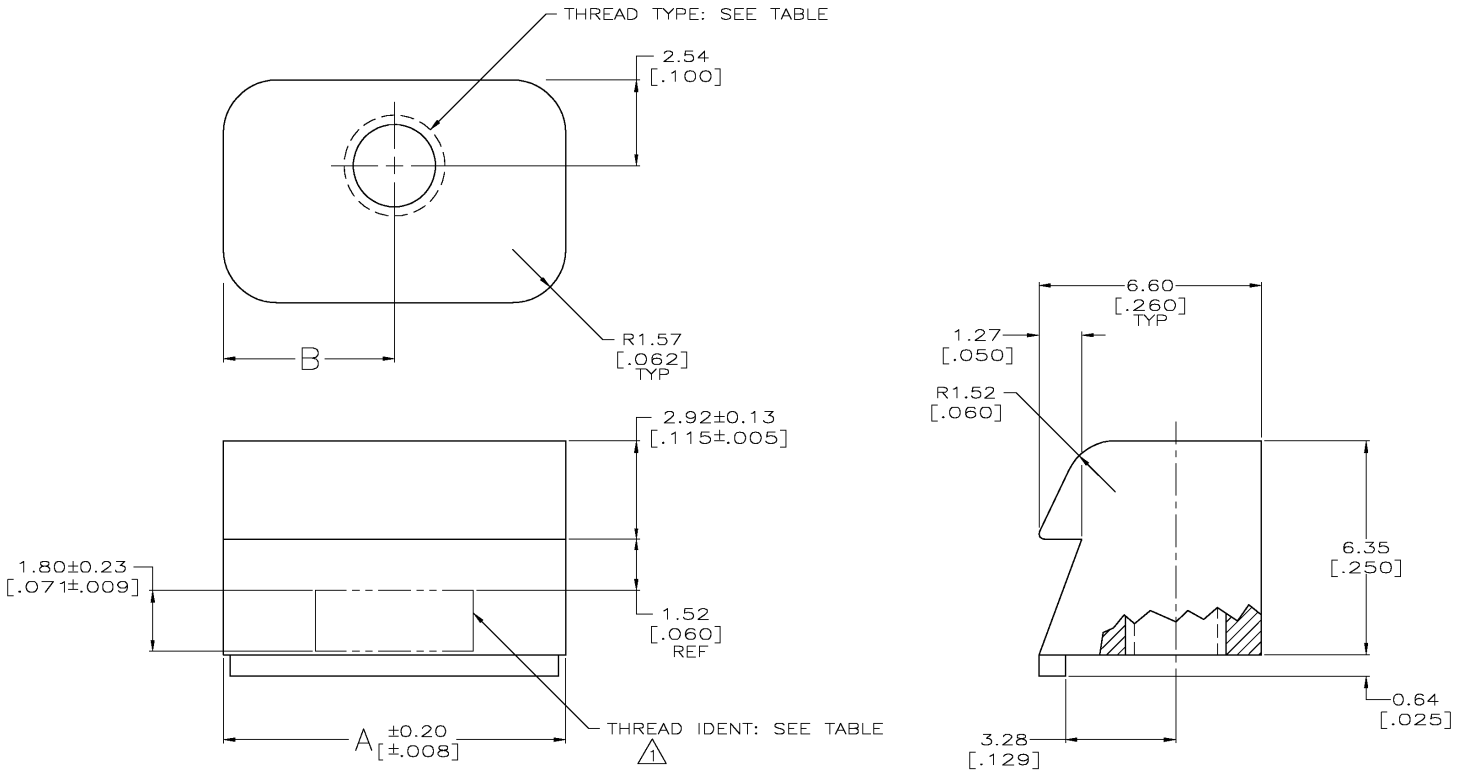

1 THREAD IDENTIFICATION LOCATED THIS AREA, 0.20 [.008] MAX RAISED CHARACTERS.

THREAD IDENT	PACKAGING	QUANTITY	THREAD TYPE	B	A	PART NUMBER
4-40	ONE KIT PER BAG	2	4-40 UNC-2B	6.73 [.265]	13.46 [.530]	1-208101-1
4-40	BULK PACKAGED	2	4-40 UNC-2B	5.08 [.200]	10.16 [.400]	208101-9
4-40	ONE KIT PER BAG	2	4-40 UNC-2B	5.08 [.200]	10.16 [.400]	208101-8
M3	BULK PACKAGED	2	M3 X 0.5-6H	5.08 [.200]	10.16 [.400]	208101-2
M3	ONE KIT PER BAG	2	M3 X 0.5-6H	5.08 [.200]	10.16 [.400]	208101-1

THIS DRAWING IS A CONTROLLED DOCUMENT.

DIMENSIONS: mm[INCHES]

TOLERANCES UNLESS OTHERWISE SPECIFIED:
0 PLC ± -
1 PLC ± -
2 PLC ± 0.25 [.010]
3 PLC ± -
4 PLC ± -
ANGLES ± -

MATERIAL: ZINC
FINISH: -

DWN B. MCMASTER 10MAR04
CHK C. ROHDE 10MAR04
APVD M. WALMSLEY 10MAR04
PRODUCT SPEC -
APPLICATION SPEC -
WEIGHT -

tyco Electronics
Tyco Electronics Corporation
Harrisburg, Pa 17105-3608

NAME: LATCHING BLOCK, AMPLIMITE™

SIZE	CAGE CODE	DRAWING NO	RESTRICTED TO
A2	00779	C-208101	-

CUSTOMER DRAWING
SCALE 10:1 SHEET 1 OF 1 REV H

208101

AMP 1471-9 REV 31MAR2000