MOUNTING INFORMATION

LEGEND

- OCCUPIED AREA BY PART
- SOLDER PASTE PATTERN
- RECOMMENDED PAD, MUST BE ABLE TO SUPPORT CONTINUOUS SIGNAL CURRENT.

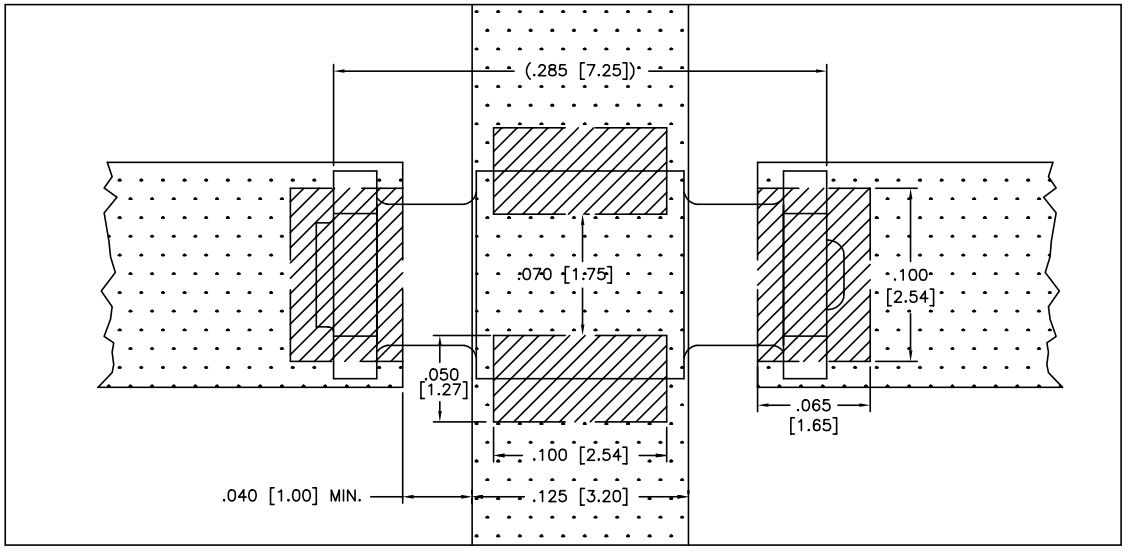

CIRCUIT CONFIGURATION

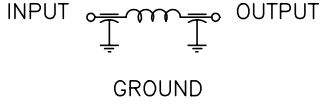

TYPICAL INSERTION LOSS: 16dB @ 10MHz
26dB @ 30MHz
42dB @ 100MHz
33dB @ 500MHz
30dB @ 1GHz

REV. NO.	CHANGE NOTICE
03	CN 188627
02	CN 180622
01	CN 178172
00	CN 171657

UNLESS OTHERWISE SPECIFIED DIMENSIONS ARE IN INCHES.

DO NOT SCALE.

TOLERANCES UNLESS OTHERWISE SPECIFIED
Fractions ± 1/64
Dec. .xx ± .01
Dec. .xxx ± .005
Angles ±0° 30′

CODE IDENT. NO. OLSP2

SPECTRUM CONTROL INC.

ERIE, FAIRVIEW PENNSYLVANIA

Dwn. KAUFFMAN
Ckd. 2-20-96
Apvd.
Sheet 2 of 2

Description
SURFACE MOUNT FILTER

PSM1-402Z-10T

Quality Products From The Specialists In Electro-Magnetic Compatibility