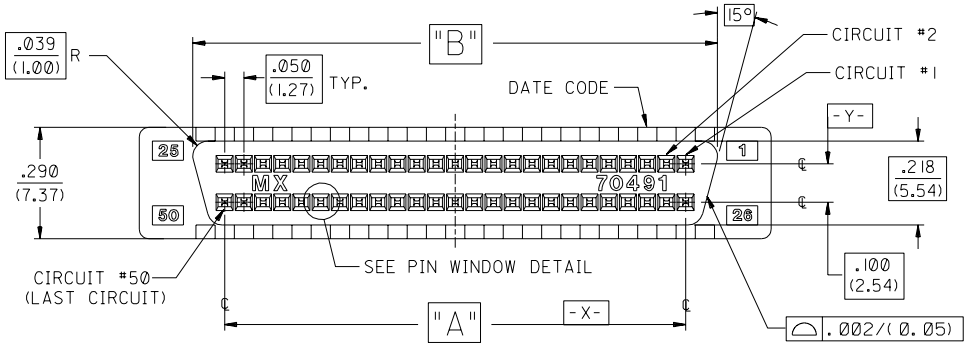

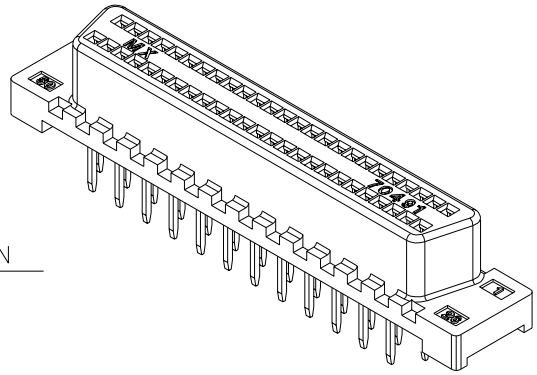

50 CIRCUIT SHOWN

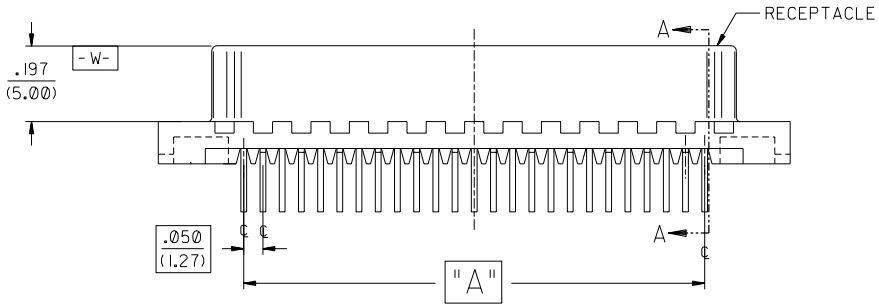

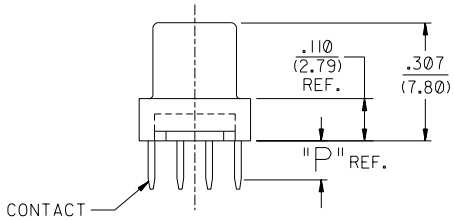

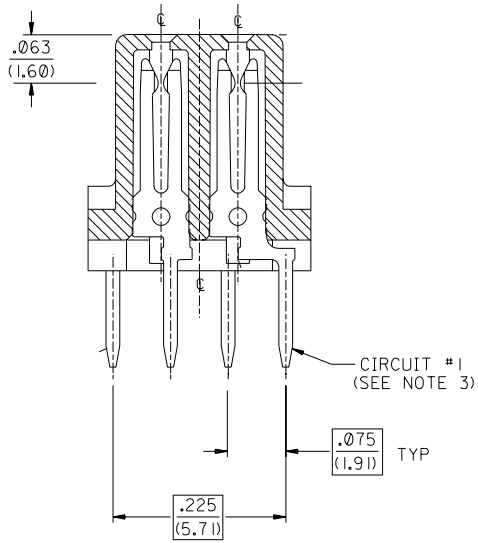

SECTION "A-A"
SCALE 8:1

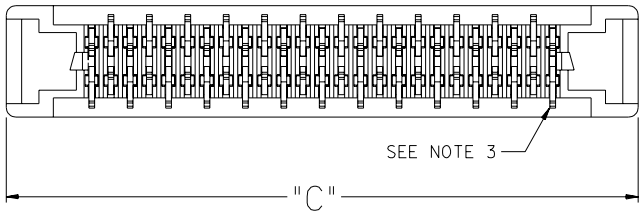

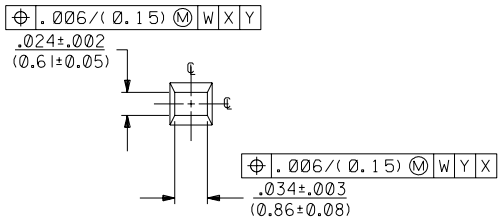

PIN WINDOW DETAIL
SCALE 10:1

NOTES:

1. SEE SHEET 2 FOR PART NO.S AND CHARTED DIMENSIONS AND P.C. BOARD LAYOUT.
2. 50 CIRCUIT SHOWN FOR ILLUSTRATION PURPOSES ONLY.
3. TAIL PATTERN FIXED AT CIRCUIT NO. (1) POSITION FOR ALL CIRCUIT SIZES SHOWN.

LTR.	REVISIONS	LTR.	REVISIONS
		F	ADDED PIN WINDOW DETAIL PER EC # U80357 J. LONG 97/08/01
H	OBSOLETE PART # ECR# UCP2005-0311 BSMART 04/08/05	E	CHANGED PACKAGING PER ECR # U51013 95/04/07 J. LONG
G	ADD LEADFREE NOTE ECR# UCP2004-1925 DMORGAN 04/04/02	D1	ADDED EDP NO. PER ECR # U40602 5/06/94 JL/BOWEN

DIMENSIONS SHOWN (METRIC) INCH

UNLESS OTHERWISE SPECIFIED TOLERANCES: ANGULAR ± 1/2°

		INCH	METRIC
3 PLACE	±	.010	---
2 PLACE	±	---	± 0.25
1 PLACE		---	± ---

DRAFT WHERE APPLICABLE MUST REMAIN WITHIN DIMENSIONS

DRWG. BY J. Long | CHK'D. BY DCB
APP'D. BY J D | SCALE 4: 1

MFG.	SH.	REV.
	2	H
	1	H

REVISE ONLY ON CAD SYSTEM

TITLE: SALES ASSEMBLY SCSI VERTICAL RECEPTACLE

molex MOLEX INCORPORATED LISLE, ILL. 60532 U.S.A.

SHEET NO. 1 of 2 | DATE 06/17/92

PART NO. SEE SHEET 2 | DRWG. NO. SDA-70491-1***

FILE NAME 57049111 DGN

THIS DRAWING CONTAINS INFORMATION THAT IS PROPRIETARY TO MOLEX INC. AND SHOULD NOT BE USED WITHOUT WRITTEN PERMISSION.

DIV. TC | SIZE C

EDP NO.	CKT. SIZE	DIM. A INCH	DIM. A MM	DIM. B INCH	DIM. B MM	DIM. C INCH	DIM. C MM	DIM. P TAIL LENGTH	RECOMMENDED PCB INCH	RECOMMENDED PCB MM
015-87-0201	50	1.200	30.48	1.366	34.70	1.645	41.78	.125	.062 OR .093	1.57 OR 2.36
015-87-0203	50	1.200	30.48	1.366	34.70	1.645	41.78	.165	.125	3.18
015-87-0205	68	1.650	41.91	1.816	46.13	2.095	53.21	.125	.062 OR .093	1.57 OR 2.36
015-87-0207	68	1.650	41.91	1.816	46.13	2.095	53.21	.165	.125	3.18

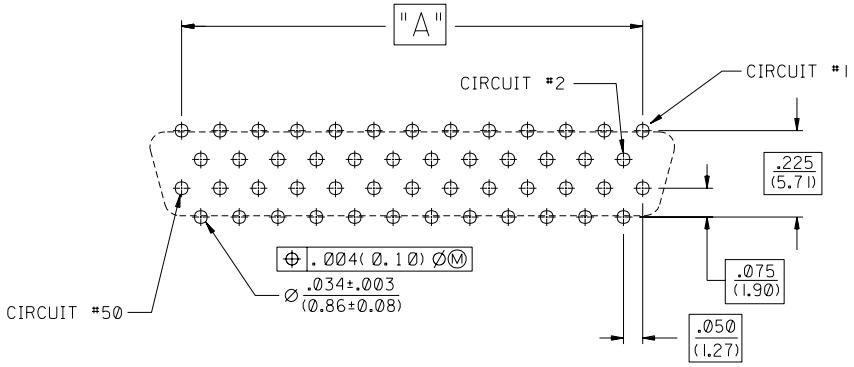

TYPE I 50 CKT. P.C. BOARD LAYOUT
CONNECTOR SIDE

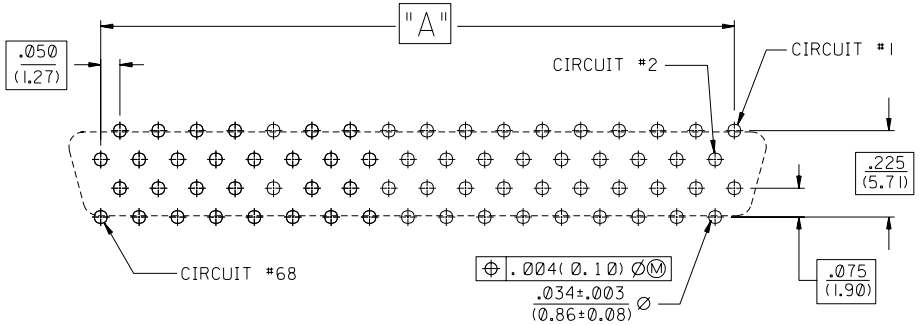

TYPE I 68 CKT. P.C. BOARD LAYOUT
CONNECTOR SIDE

NOTES:

1. REFER TO PS-79058 PRODUCT SPEC. FOR ELECTRICAL, MECHANICAL AND ENVIRONMENTAL SPECIFICATIONS.
2. MATERIAL:
   RECEPTACLE HOUSING: GLASS FILLED LCP (LIQUID CRYSTAL POLYMER; COLOR-BLACK; UL 94V-0
   CONTACTS: PHOSPHOR BRONZE
3. PACKAGING:
   PARTS PACKAGED IN TUBES PER PK-70873-0427.
4. PLATING:
   SELECTIVE GOLD: THICKNESS= 30 MICROINCHES/(0.76 MICROMETERS) MINIMUM.
   SELECTIVE TIN: THICKNESS= 75 MICROINCHES/(1.90 MICROMETERS) MINIMUM.
   NICKEL UNDERPLATE OVERALL.

NOTE FOR LEAD FREE CONVERSION:
THE PRIMARY SHIPPING CARTON WILL BE LABELED "COMPLIANT TO RoHS DIRECTIVE 2002/95/EC AND ELV ANNEX II OF DIRECTIVE 2000/53/EC". CARTONS WITHOUT THIS LABEL MAY CONTAIN PRODUCT WITH LEAD.

LTR.	REVISIONS	LTR.	REVISIONS
		F	SEE SHEET 1
H	SEE SHEET 1	E	SEE SHEET 1
G	SEE SHEET 1	D	SEE SHEET 1

DIMENSIONS SHOWN (METRIC) INCH
UNLESS OTHERWISE SPECIFIED TOLERANCES: ANGULAR ± 1/2°

	INCH	METRIC
3 PLACE	± .010	---
2 PLACE	± ---	± 0.25
1 PLACE	---	± ---

DRAFT WHERE APPLICABLE MUST REMAIN WITHIN DIMENSIONS

DRWG. BY J. Long | CHK'D. BY DCB
APP'D. BY J D | SCALE :

MFG. | SH. | REV.
REVISE ONLY ON CAD SYSTEM

TITLE
SALES ASSEMBLY SCSI
VERTICAL RECEPTACLE

molex MOLEX INCORPORATED LISLE, ILL. 60532 U.S.A.
SHEET NO. 2 | DATE 06/17/92
PART NO. SEE CHART | DRWG. NO. SDA-70491-1***
FILE NAME S7049112 DGN
THIS DRAWING CONTAINS INFORMATION THAT IS PROPRIETARY TO MOLEX INC. AND SHOULD NOT BE USED WITHOUT WRITTEN PERMISSION.
DIV. TC | SIZE C

70491